NATURAL LIGHT ENERGY SYSTEMS, dba KENNEDY SKYLIGHTS

MODEL "ICMG" CURB MOUNTED GLASS SKYLIGHT - LMI

INSTALLATION ANCHORAGE DETAILS

GENERAL NOTES:

1. THE PRODUCT ANCHORAGE SHOWN HEREIN IS DESIGNED TO COMPLY WITH THE REQUIREMENTS OF THE CURRENT EDITION OF THE FLORIDA BUILDING CODE - BUILDING (FBC) AND RESIDENTIAL (FRC) VOLUMES INCLUDING THE HIGH VELOCITY HURRICANE ZONE (HVHZ) FOR LARGE MISSILE IMPACT (INCLUDES WIND ZONE 4, MISSILE LEVEL D) AT THE DESIGN PRESSURE(S) STATED HEREIN.

2. THE PRODUCT DETAILS CONTAINED HEREIN ARE BASED UPON SIGNED AND SEALED TEST REPORT NO. NCTL-210-3041-1, 2 AND ASSOCIATED LABORATORY STAMPED DRAWINGS.

3. THE SKYLIGHT HAS BEEN TESTED IN ACCORDANCE WITH THE HIGH VELOCITY HURRICANE ZONE (HVHZ) REQUIRMENTS OF TAS 201, TAS 202 AND TAS 203 AS REQUIRED BY THE CURRENT EDITION OF THE FLORIDA BUILDING CODE - BUILDING (FBC) AND RESIDENTIAL (FRC) VOLUMES AND DOCUMENTED IN SIGNED AND SEALED TEST REPORT NO. NCTL-210-3041-1, 2 AND ASSOCIATED LABORATORY STAMPED DRAWINGS.

4. GLASS MEETS THE REQUIREMENTS OF ASTM E1300-12AE1. SEE SHEET 3 FOR GLAZING DETAILS.

5. ADEQUACY OF THE EXISTING STRUCTURAL FRAMING AS A MAIN WIND FORCE RESISTING SYSTEM CAPABLE OF WITHSTANDING AND TRANSFERRING APPLIED PRODUCT LOADS TO THE STRUCTURE IS THE RESPONSIBILITY OF THE ENGINEER OR ARCHITECT OF RECORD.

6. SITE CONDITIONS THAT DEVIATE FROM THE DETAILS OF THIS DRAWING REQUIRE THE FOLLOWING:
   - 6.1. IN NON-HVHZ, FURTHER ENGINEERING ANALYSIS BY A LICENSED PROFESSIONAL ENGINEER OR REGISTERED ARCHITECT.
   - 6.2. IN HVHZ, FURTHER ENGINEERING ANALYSIS BY A LICENSED PROFESSIONAL ENGINEER OR REGISTERED ARCHITECT AND ONE TIME APPROVAL FROM THE LOCAL AUTHORITY HAVING JURISDICATION IS REQUIRED.

7. IN HVHZ AREAS, USE OF AN APPROVED IMPACT PROTECTIVE SYSTEM COMPLYING WITH THE HVHZ REQUIREMENTS OF THE FBC IS NOT REQUIRED FOR THE PRODUCT(S) HEREIN. IN NON-HVHZ AREAS WHERE WINDBORNE DEBRIS PROTECTION REQUIREMENTS EXIST, USE OF AN IMPACT PROTECTIVE SYSTEM COMPLYING WITH THE FBC REQUIREMENTS FOR WINDBORNE DEBRIS REGIONS IS NOT REQUIRED FOR THE PRODUCT(S) HEREIN.

8. WHEN APPLICABLE, DISSIMILAR METALS INCLUDING FASTENERS THAT MAY COME INTO CONTACT WITH ALUMINUM SKYLIGHT FRAMING SHALL HAVE BEEN PROTECTED IN A MANNER TO PREVENT GALVANIC CORROSION. FASTENERS SHALL BE MADE OF CORROSION RESISTANT METAL OR HAVE A CORROSION RESISTANT COATING.

9. CURB CONSTRUCTION AND MOUNTING DETAILS:
   - 9.1. A CURB SUPPLIED BY OTHERS CONSTRUCTED AND MOUNTED IN ACCORDANCE WITH THE REQUIREMENTS OF THE CURRENT EDITION OF THE FLORIDA BUILDING CODE - BUILDING (FBC) AND RESIDENTIAL (FRC) VOLUMES FOR THE TYPE OF CONSTRUCTION CLASSIFICATION WHERE THE SKYLIGHT IS TO BE INSTALLED IS ALLOWED.
   - 9.2. INTEGRATION WITH THE ROOF ASSEMBLY SHALL BE IN ACCORDANCE WITH CHAPTER 15 OF THE CURRENT EDITION OF THE FBC AND CHAPTER 9 OF THE CURRENT EDITION OF THE FRC.
   - 9.3. ADDITIONAL INSTALLATION DETAILING AND ENGINEERED INSTALLATION EVALUATION BY A LICENSED DESIGN PROFESSIONAL WILL BE REQUIRED FOR SUBMITTAL IN ADDITION TO THIS PRODUCT EVALUATION DOCUMENT.

DESIGN PRESSURE RATING (PSF)	IMPACT RATING
+60.0/-60.0	LARGE MISSILE

TABLE OF CONTENT

INSTALLATION NOTES:

1. INSTALL GLASS CAP INTO CURB USING INSTALLATION ANCHORS AS LISTED IN INSTALLATION ANCHOR SCHEDULE THIS SHEET. SPACE ANCHORS 4" MAX. FROM ALL ENDS AND 14" MAX. O.C. THEREAFTER, ALL SIDES.

2. APPLY ALL SEALANTS ACCORDING TO MANUFACTURER'S INSTRUCTIONS.

3. PRODUCT ANCHORS SHALL BE AS DESIGNATED AND LOCATED AS SHOWN ON THE INSTALLATION DRAWINGS. ANCHOR EMBEDMENT AND EDGE DISTANCE EXCLUDE WALL FINISHES INCLUDING, BUT NOT LIMITED TO SHEATHING, UNDERLAYMENT AND SHINGLES.

4. INSTALLATION ANCHORS AND ASSOCIATED HARDWARE MUST BE MADE OF CORROSION RESISTANT MATERIAL OR HAVE A CORROSION RESISTANT COATING. DISSIMILAR METALS OR MATERIALS IN CONTACT WITH PRESSURE TREATED WOOD MUST BE PROTECTED TO PREVENT REACTION.

5. INSTALLATION ANCHORS SHALL BE INSTALLED IN ACCORDANCE WITH ANCHOR MANUFACTURER'S INSTALLATION INSTRUCTIONS. ANCHORS SHALL NOT BE USED IN SUBSTRATES WITH STRENGTHS LESS THAN THE MINIMUM STRENGTH SPECIFIED IN THE INSTALLATION ANCHOR SCHEDULE ON THIS SHEET.

6. FOR SKYLIGHT SIZES LESS THAN THAT SHOWN IN THE ELEVATIONS, ANCHOR QUANTITIES MAY BE REDUCED BY ONE (1) WHEN SPACING BETWEEN ANCHORS IS 50% OR LESS THAN THE MAXIMUM SPACING REQUIRED.

INSTALLATION ANCHOR SCHEDULE

CURB ASSEMBLY SUBSTRATE TYPE	HEAD TYPE	SIZE	MANUFACTURER AND/OR SPECIFICATION	MIN. EMBEDMENT (IN)	MIN. EDGE DISTANCE (IN)	MIN. SPACING (IN)	CAPACITIES BASED ON
CONCRETE	HEX HEAD	3/16"	ITW TAPCON (2)	1 1/2	1 1/8	2 1/2	MIN. 2500 PSI CONCRETE BUT NOT LESS THAN THAT REQUIRED BY BUILDING CODE
			Elco Ultracon	1 3/8	1	3 3/8	MIN. 2500 PSI CONCRETE BUT NOT LESS THAN THAT REQUIRED BY BUILDING CODE
MASONRY (BLOCK/CMU)	HEX HEAD	3/16"	ITW TAPCON (2)	1	2	2 1/2	STRENGTH CONFORMANCE TO ASTM C-90, MEDIUM WEIGHT DENSITY > 117 PCF
			Elco Ultracon	1 1/4	1	3 3/8	STRENGTH CONFORMANCE TO ASTM C-90, MEDIUM WEIGHT
SOLID-SAWN LUMBER (1)	HEX, PAN OR TRUSS HEAD	NO. 8	ASME B18.6.4 (SELF-DRILLING/SELF-TAPPING SCREW)	1	5/8	5/8	WOOD WITH A MINIMUM SPECIFIC GRAVITY OF 0.55
ALUMINUM OR STEEL, 1/8" MIN. WALL THICKNESS	HEX, PAN OR TRUSS HEAD	NO. 8	ASME B18.6.4 (SELF-DRILLING/SELF-TAPPING SCREW)	PROTRUDING MIN. 3 THREADS PAST INTERIOR OF SUBSTRATE	7/16	7/16	ULTIMATE STRENGTH (Fu) OF 22,000 PSI

NOTES:
1) FOR WOOD AND TAPPING SCREWS IF SPLITTING IS A CONCERN, DRILL 0.102" (DRILL SIZE 38) PILOT HOLE FOR WOOD FRAME INSTALLATION.
2) WHEN ITW TAPCONS ARE USED FOR CONCRETE/MASONRY INSTALLATION, THEY SHALL BE THE ADVANCED THREADFORM TECHNOLOGY TYPE.

PROJECT NUMBER: 423-0504

REV	DESCRIPTION	DATE	BY
C	Update to 8th Edition (2023) FBC	10/16/23	RJA
B	Update to 6th Edition (2017) FBC	12/6/17	RJA
A	Update to 5th Edition (2014) FBC	7/15/15	RJA

NATURAL LIGHT ENERGY SYSTEMS, dba KENNEDY SKYLIGHTS
5294 TOWER WAY
SANFORD, FL 32773

TITLE: MODEL "ICMG" CURB MOUNTED GLASS SKYLIGHT
LARGE MISSILE IMPACT
GENERAL AND INSTALLATION NOTE

DRAWN BY: TJH
DATE: 05/08/12
SCALE: N.T.S.
DRAWING NO: KENN0001
REV: C
SHEET: 1 OF 4

PREPARED BY:
PTC PRODUCT DESIGN GROUP, LLC
PO BOX 520775
LONGWOOD, FLORIDA 32752
FBPE C.A. NO. 26935
Phone: 321.690.1788
Fax: 321.690.1789
Email: info@ptc-corp.com

Robert J. Amoruso, P.E.
FL P.E. No. 49752

ROBERT JAMES AMORUSO LICENSE No 49752 STATE OF FLORIDA PROFESSIONAL ENGINEER

Digitally signed by Robert J Amoruso
Date: 2023.11.28 16:54:08 -05'00'

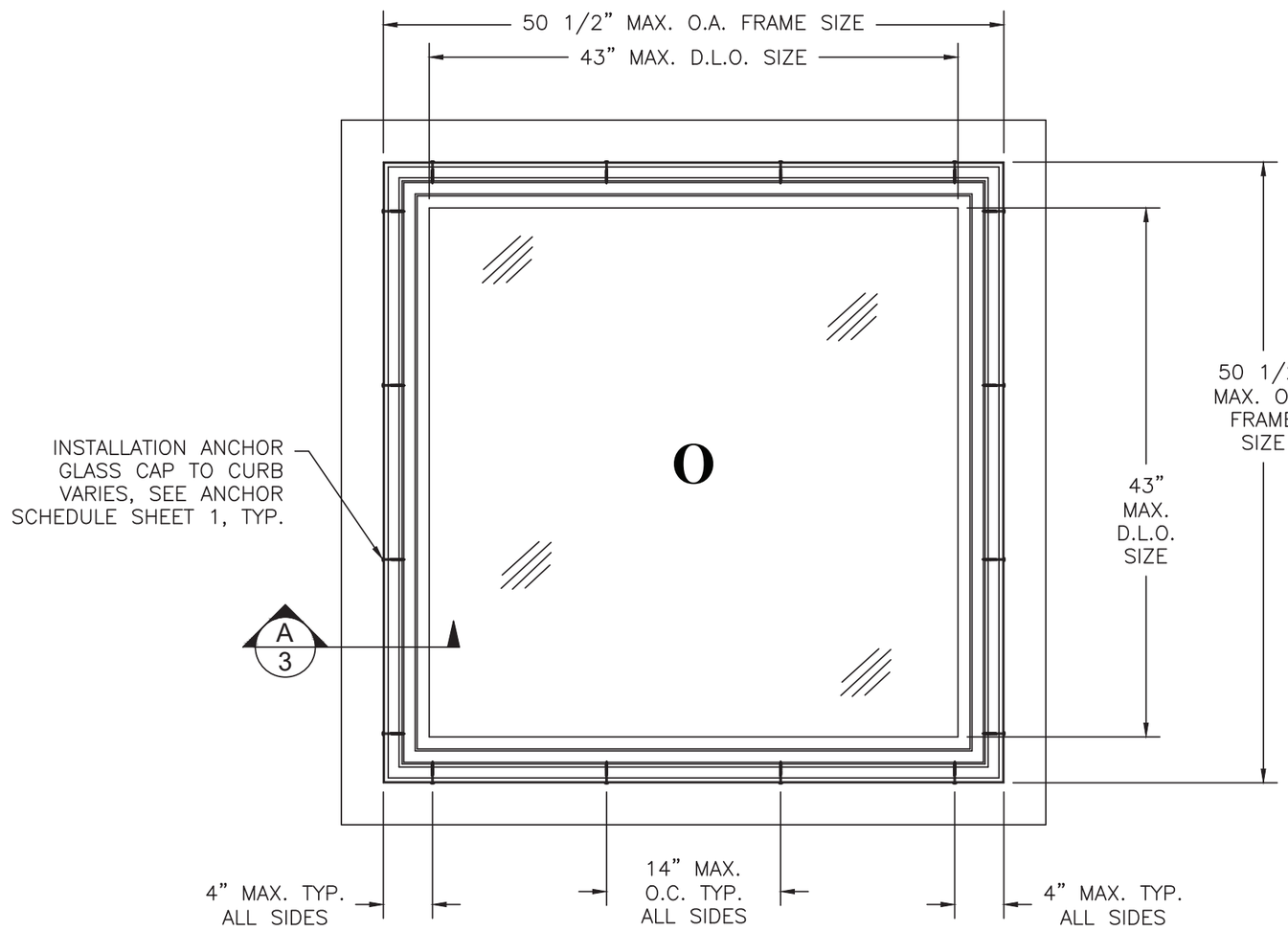

MODEL "ICMG" CURB MOUNTED SKYLIGHT

EXTERIOR VIEW

REV	DESCRIPTION	DATE	BY
C	Update to 8th Edition (2023) FBC	10/16/23	RJA
B	Update to 6th Edition (2017) FBC	12/6/17	RJA
A	Update to 5th Edition (2014) FBC	7/15/15	RJA

PROJECT NUMBER: 423-0504

NATURAL LIGHT ENERGY SYSTEMS, dba KENNEDY SKYLIGHTS

5294 TOWER WAY
SANFORD, FL 32773

TITLE: MODEL "ICMG" CURB MOUNTED GLASS SKYLIGHT LARGE MISSILE IMPACT ELEVATION AND ANCHORING LAYOUT

DRAWN BY: TJH

DATE: 05/08/12

SCALE: N.T.S.

DRAWING NO: KENN0001

REV: C

SHEET: 2 OF 4

PREPARED BY:

PTC PRODUCT DESIGN GROUP, LLC
P.O BOX 520775
LONGWOOD, FLORIDA 32752
FBPE C.A. NO. 26935
Phone: 321.690.1788
Fax: 321.690.1789
Email: info@ptc-dcp.com

Robert J. Amoruso, P.E.
FL P.E. No. 49752

ROBERT JAMES AMORUSO LICENSE No 49752 STATE OF FLORIDA PROFESSIONAL ENGINEER

Digitally signed by Robert J Amoruso
Date: 2023.11.28 16:54:25 -05'00'

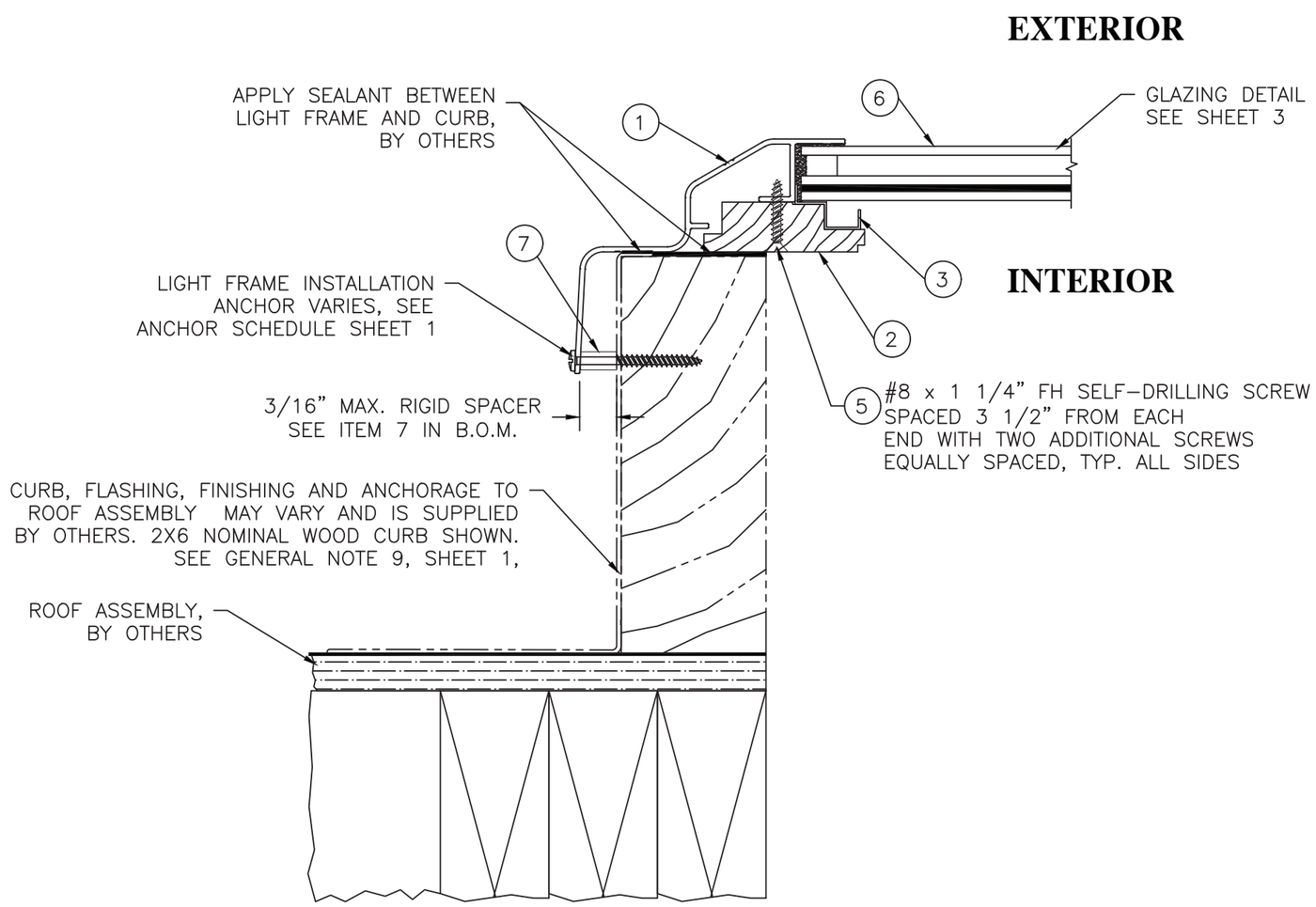

A/3 INSTALLATION CROSS SECTION

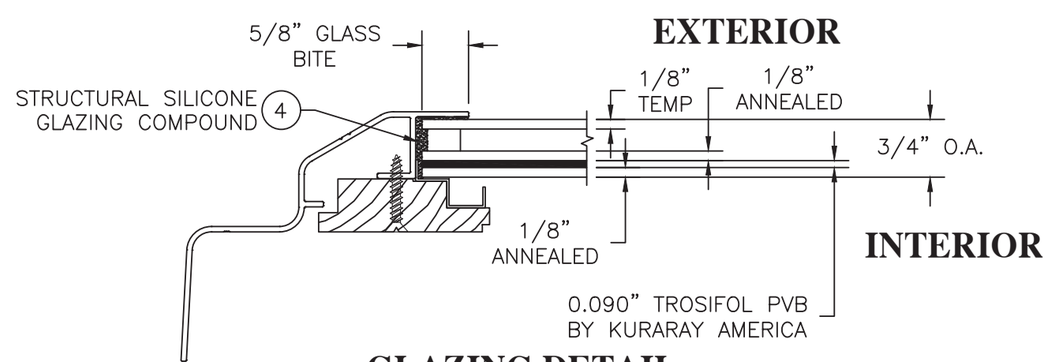

GLAZING DETAIL

REV	DESCRIPTION	DATE	BY
C	Update to 8th Edition (2023) FBC	10/16/23	RJA
B	Update to 6th Edition (2017) FBC	12/6/17	RJA
A	Update to 5th Edition (2014) FBC	7/15/15	RJA

PROJECT NUMBER: 423-0504

NATURAL LIGHT ENERGY SYSTEMS, dba KENNEDY SKYLIGHTS
5294 TOWER WAY
SANFORD, FL 32773

TITLE: MODEL "ICMG" CURB MOUNTED GLASS SKYLIGHT
LARGE MISSILE IMPACT
INSTALLATION CROSS SECTION AND GLAZING DETAIL

DRAWN BY: TJH
DATE: 05/08/12
SCALE: N.T.S.
DRAWING NO: KENN0001
REV: C
SHEET: 3 OF 4

PREPARED BY:
PTC PRODUCT DESIGN GROUP, LLC
P.O BOX 520775
LONGWOOD, FLORIDA 32752
FBPE C.A. NO. 26935
Phone: 321.690.1788
Fax: 321.690.1789
Email: info@ptc-corp.com

Robert J. Amoruso, P.E.
FL P.E. No. 49752

ROBERT JAMES AMORUSO LICENSE No 49752 STATE OF FLORIDA PROFESSIONAL ENGINEER

Digitally signed by Robert J Amoruso
Date: 2023.11.28 16:54:38 -05'00'

BILL OF MATERIALS

ITEM #	PART #	ITEM DESCRIPTION	MANUFACTURER	MATERIAL
1	FE4701	GLASS CAP	INDALEX ALUM. SOLUTIONS	ALUM. 6063–T6
2	SM KS–4	WOOD LIGHT FRAME	NATURAL LIGHT ENERGY SYSTEMS, dba KENNEDY SKYLIGHTS	WOOD
3	AK–2474	CONDENSATION CHANNEL	CENTRAL PLASTICS, INC.	HIGH TEMP. PVC
4		GLAZING COMPOUND	NOVAFLEX	STRUCTURAL SILICONE
5		#8 x 1 1/4" FH SELF–DRILLING SCREW		
6		LARGE MISSILE IMPACT GLAZING, SEE SHEET 3		
7		RIGID SPACER FOR GLASS CAP INSTALLATION, SEE INSTALLATION NOTE 4, SHEET 1		RIGID

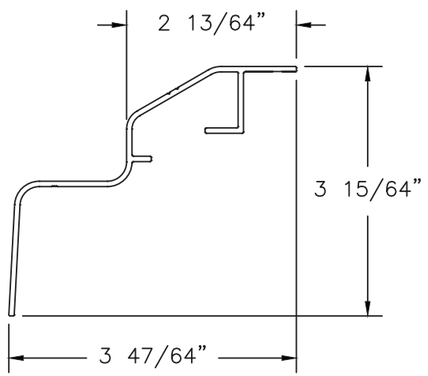

1 **GLASS CAP**
EXTRUDED ALUMINUM 6063-T6
0.070" THICK

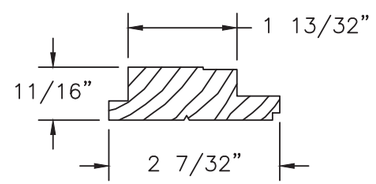

2 **WOOD LIGHT FRAME**

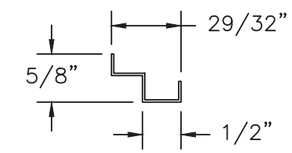

3 **CONDENSATION CHANNEL**
EXTRUDED HIGH TEMP RIGID PVC
0.030" THICK

PROJECT NUMBER: 423–0504

REV	DESCRIPTION	DATE	BY
C	Update to 8th Edition (2023) FBC	10/16/23	RJA
B	Update to 6th Edition (2017) FBC	12/6/17	RJA
A	Update to 5th Edition (2014) FBC	7/15/15	RJA

NATURAL LIGHT ENERGY SYSTEMS, dba KENNEDY SKYLIGHTS
5294 TOWER WAY
SANFORD, FL 32773

TITLE: MODEL "ICMG" CURB MOUNTED GLASS SKYLIGHT
LARGE MISSILE IMPACT
BILL OF MATERIALS AND COMPONENTS

DRAWN BY: TJH
DATE: 05/08/12
SCALE: N.T.S.
DRAWING NO: KENN0001
REV: C
SHEET: 4 OF 4

PREPARED BY:
PTC PRODUCT DESIGN GROUP, LLC
PO BOX 520775
LONGWOOD, FLORIDA 32752
FBPE C.A. NO: 25935
Phone: 321.690.1788
Fax: 321.690.1789
Email: info@ptc-corp.com

Robert J. Amoruso, P.E.
FL P.E. No. 49752

ROBERT JAMES AMORUSO
LICENSE
No 49752
STATE OF FLORIDA
PROFESSIONAL ENGINEER

Digitally signed by Robert J Amoruso
Date: 2023.11.28 16:55:08 -05'00'